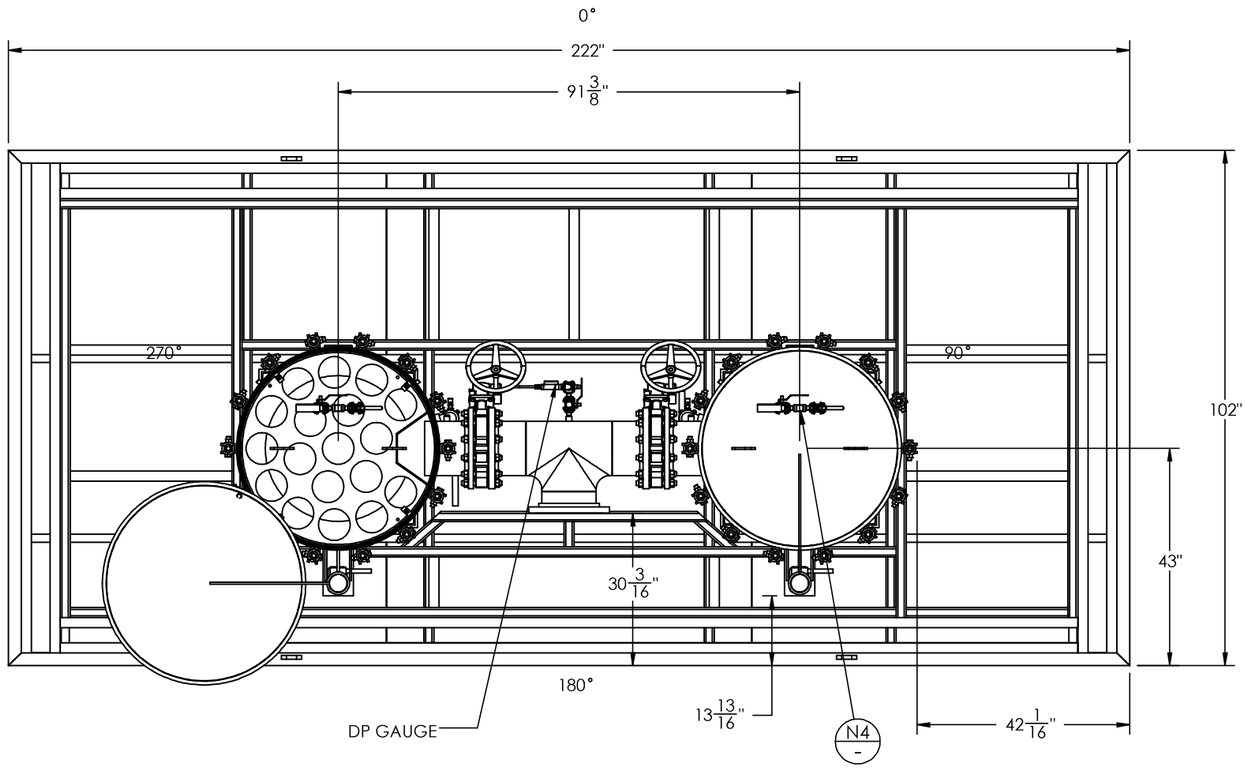

NOZZLE SCHEDULE		
MARK	SIZE / RATING	DESCRIPTION
N1	10" 150# RFSO	INLET
N2	10" 150# RFSO	OUTLET
N3	1/2" 3000# NPT	PRESSURE GAUGE
N4	1/2" 3000# NPT	VENT
N5	2" 3000# NPT	CLEAN DRAIN
N6	2" 3000# NPT	DIRTY DRAIN

VESSEL DESIGN CONDITIONS			
CODE:	ASME SECTION VIII, DIV 1, 2015 EDITION		
M.A.W.P.:	150 PSI @ 250°F	M.D.M.T.:	-20° F @ 150 PSI
M.A.E.P.:	15 PSI @ 250°F		
CORROSION ALLOWANCE:	NONE	HYDROTEST PRESS:	195 PSI
STAMP:	U/ CRN	SERVICE:	NON LETHAL
PWHT:	N/A	RADIOGRAPHY:	N/A
MATERIAL:	SS304	GASKET:	BUNA-N

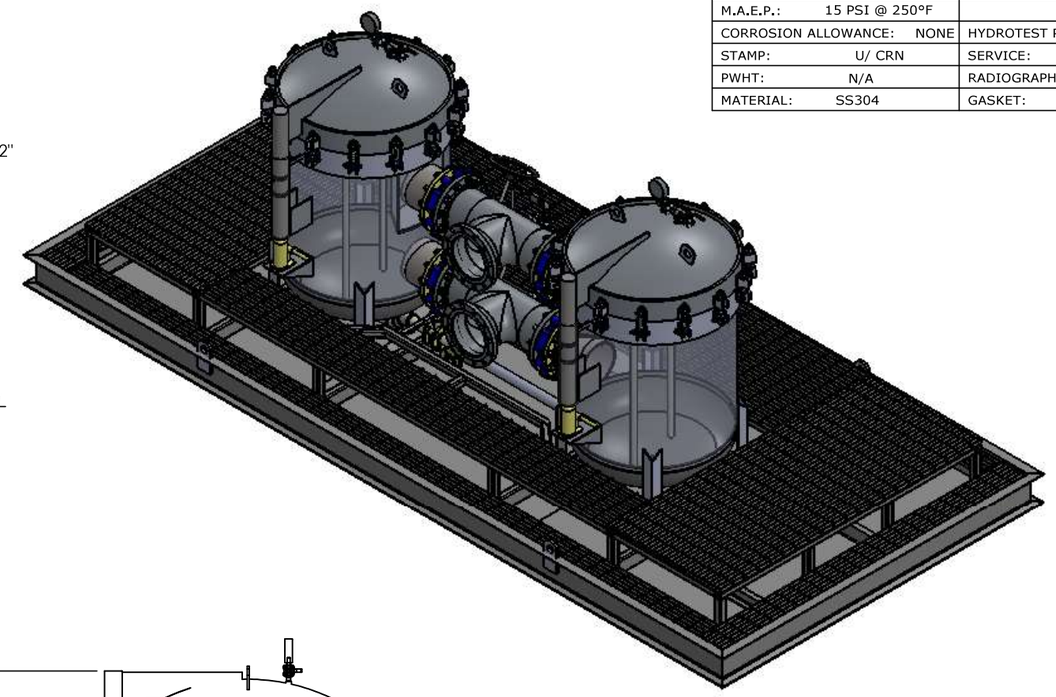

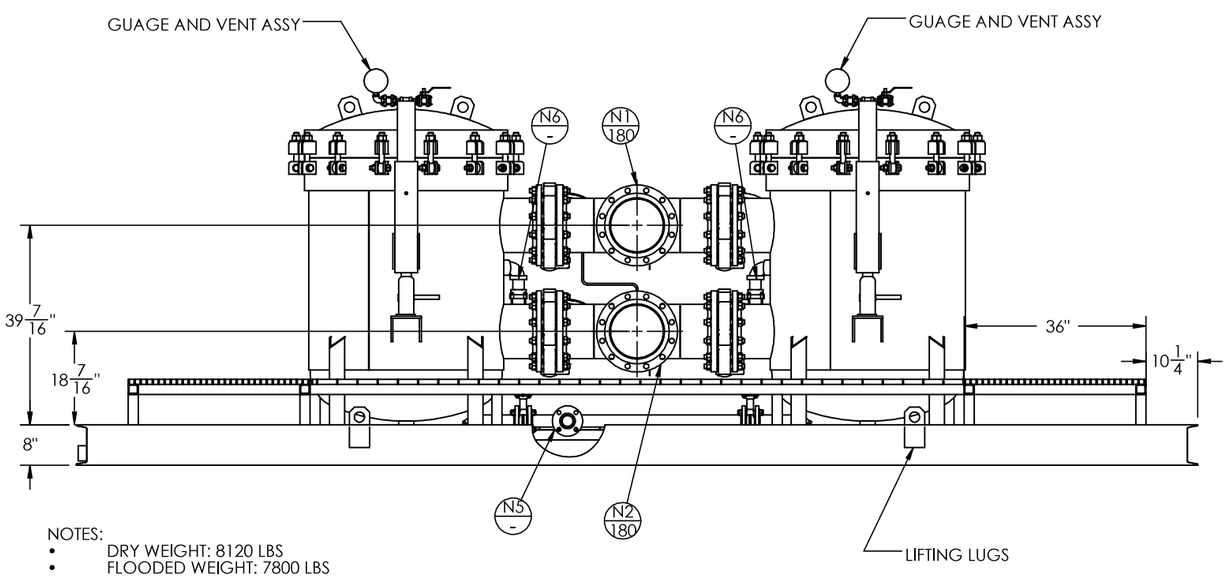

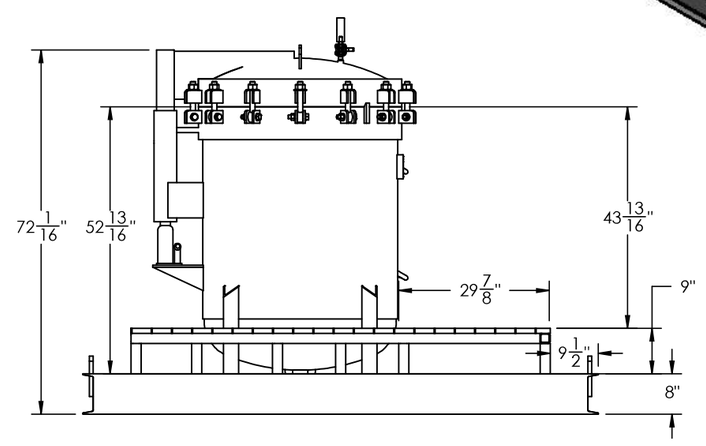

NOTES:

- DRY WEIGHT: 8120 LBS
- FLOODED WEIGHT: 7800 LBS
- SHIPPING WEIGHT: 6000 LBS
- VESSEL VOLUME: 32 C.F. /VESSEL
- EACH VESSEL WILL HOUSE (QTY=18) SIZE 2 FILTER BASKETS (36 TOTAL)
- ISOLATIONS BUTTERFLY VALVES. CS BODY W/ SS316 TRIM, BUNA SEALS .
- CARBON STEEL SKID WITH CONTAINMENT AND PLATFORM.
- SKID IS PAINTED SAFETY RED.
- COMMON CLEAN DRAIN.
- ALL CONNECTICTION ARE VALVES OR PLUGGED.
- COMES WTIH QTY 2. 10"- 8" 150# REDUCERS AND QTY2. 8"-6" 150# REDUCERS.
- CRN: Y0112.231

THIRD ANGLE PROJECTION

TOLERANCES-UNLESS OTHERWISE NOTED
DECIMAL .X = ±.1" .XX = ±.02" .XXX = ±.005"
FRACTIONAL = ±1/8"
ANGULAR = ± 1°
MAX. MACHINED SURFACE FINISH 125

FIL-TREK CORPORATION
55 Stafford Court
Cambridge, Ontario
N1T 2B3
Canada
Phone: (519) 623-7448
Fax: (519) 623-8807
Email: info@fil-trek.com
Website: www.fil-trek.com

THIS DRAWING IS THE PROPERTY OF 'FIL-TREK CORPORATION' AND MUST NOT BE COPIED OR USED IN ANY WAY DETRIMENTAL TO THE CORPORATION

EQUIPMENT: DUPLEXED BAG FILTER VESSEL (LPD SERIES)
MODEL NO: S4LPDV38-3612-10F-V2-150
CUSTOMER: FIL-TREK

PARENT:	DRAWN: CR	DATE: 01/02/2017	SERIAL No.	PART. No.	REV. No.
NEW DESIGN	CHK'D: JJJ	SCALE: NTS		002004-00101	0